PSU IME Capstone #1

Final Report

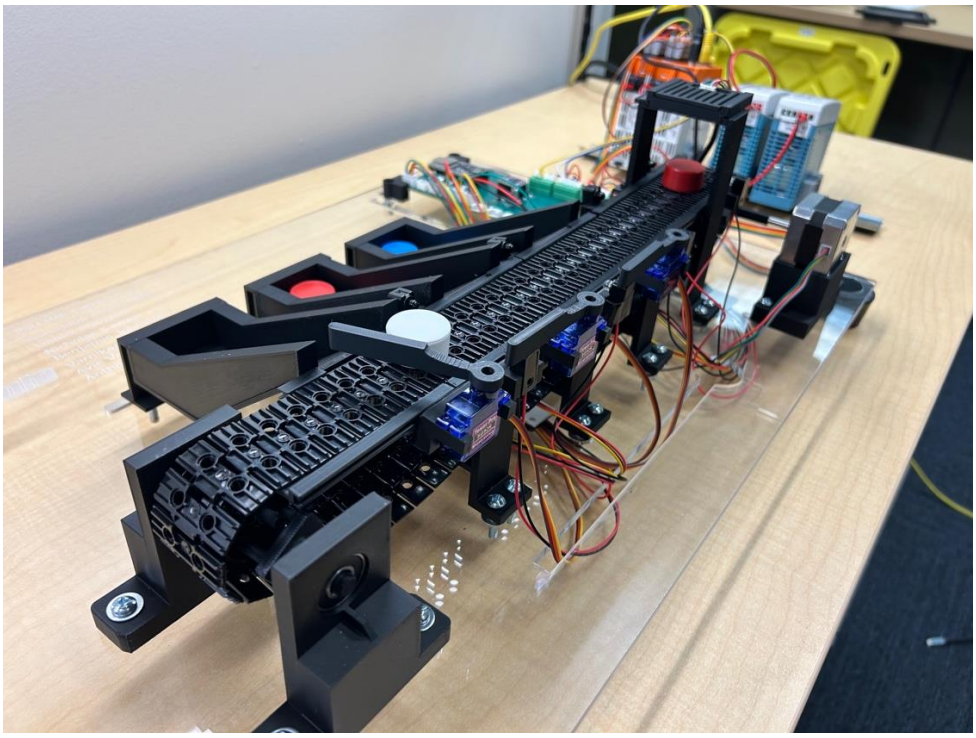

2026-04-26

Figure 1. Final CAD Assembly

Submitted to:
Prof. Brian Thomas Zajac
344 Leonhard Building
The Pennsylvania State University Park, PA 16802
Submitted by:
Nicholas Savoca, Benjamin Johnston, Daniel Pellizzari, Varnikaa Arora, Anthony Ottaviano, Avie Vasantlal

Advisor:
Prof. Brian Thomas Zajac

Y	N	
☐	☒	Intellectual Property Rights Agreement Applies
☐	☒	Non-Disclosure Agreement Applies

Executive Summary

The Harold & Inge Marcus Department of Industrial & Manufacturing Engineering at The Pennsylvania State University is launching a new course in industrial automation and robotics. They are seeking a low-cost, open-source, and modular tabletop training platform that supports hands-on learning in industrial control systems, programmable logic controllers (PLCs), system integration, and digital twins while currently lacking an affordable, modular physical platform for lab instruction. The department's existing commercial training devices provide strong functionality but are too expensive, closed, and difficult to modify or repair, limiting their suitability for long-term academic use and iterative student prototyping.

The student team designed and prototyped an MVP tabletop production cell that sorts small colored cylinders representing workpieces in a manufacturing line. Key requirements include modular and reconfigurable mechanical design, predominantly 3D-printed or easily fabricated components, low assembly complexity, 24V PLC compatibility using ladder logic via OpenPLC on RevPi hardware, minimized custom electronics, and sourcing of all major components from established suppliers. In-scope activities include mechanical design using primarily 3D-printed components, integration of 24 V electrical hardware aligned with IEC 61131-2/3, PLC-based control logic, industrial sensor integration, and development of a digital twin in ProtoTwin. Stretch goals include multi-size LEGO sorting, a bulk hopper with automatic singulation, and interoperability with other tabletop cells to create an end-to-end automated workflow.

Core deliverables include: (1) a working physical prototype suitable for classroom demonstrations, (2) complete open-source documentation including CAD, bill of materials, assembly drawings, wiring diagrams, and source code, and (3) a validated ProtoTwin model of the system. Key budget requirements include a target build cost of approximately $100 per unit with an absolute maximum of $500. Expected benefits include substantial cost reduction relative to commercial trainers, improved instructional quality through hands-on interaction with industrial hardware, reduced setup and maintenance effort, and a flexible open-source platform that future cohorts can modify, repair, and extend. The project is planned for 15 weeks, starting January 12th and ending by May 3rd with the Capstone Showcase and Program Closeout Review.

In order to be efficient, we divided our group into three subgroups, which were Mechanical, Electrical, and Software, which enabled parallel development. The design process utilized decision matrices to prioritize cost-efficiency and modularity. The team delivered a physical prototype mounted on a laser-cut acrylic baseplate with a custom 24V PCBA, modular 3D-printed components, and a CODESYS Function Block control program deployed on a RevPi. A few of the stretch goals were reserved for future development, but primary deliverables of CAD files, BOM, and source code were completed and uploaded to an open-source GitHub repository. Financially, the project achieved its goal of remaining under the $500 maximum budget constraint, achieving a final per-unit cost of $325.97. This represents an approximate 76.5% cost reduction compared to the $1,387 commercial Fischertechnik equivalent (Studica, n.d.), successfully proving the viability of a highly affordable, open-source educational platform.

Table of Contents

Executive Summary 2
1.0 Introduction 4
2.0 Problem Statement 5
3.0 Project Requirements 7
3.1 Risk Management 10
4.0 Approach 13
4.1 Schedule Narrative 17
4.2 Individual Contributions 18
5.0 Schedule 19
6.0 Results 21
6.1 Requirements Verification 24
6.2 Deliverables 30
6.3 Future Work 30
6.4 Expected Benefits 31
7.0 Expenditures 32
Acknowledgements 33
References 34
Appendix A: Budget 35

1.0 Introduction

The Harold & Inge Marcus Department of Industrial & Manufacturing Engineering (IME) at Penn State emphasizes hands-on laboratory experiences that prepare students to design, control, and improve modern manufacturing systems (About the Department, 2021). To support a new course in industrial automation and robotics, the sponsor seeks a tabletop training platform that exposes students to realistic industrial technologies such as sensors, actuators, and programmable logic controllers (PLCs), while remaining low-cost, open-source, and easy to modify for future use. As part of this effort, the project will adapt and "open up" the existing Fischertechnik line sorter concept by recreating a functionally similar line using predominantly 3D-printed and readily sourced components, and by releasing all CAD, electrical documentation, and control code as open-source artifacts so that other instructors and students can study, replicate, and extend the design.

Existing commercial tabletop "smart factory" trainers, including proprietary Fischertechnik-based systems (fischertechnik, 2016), demonstrate that compact production cells are effective for teaching PLC programming, sequencing, and system integration, but these systems are relatively expensive and closed, limiting their ability in iterative student experimentation and long-term maintainability within an academic setting. The proposed project addresses this gap by developing a modular tabletop production cell that sorts small colored cylinders, representing workpieces in a discrete manufacturing line, implementing as an open-source reinterpretation of the Fischertechnik-style line sorter. The system focuses on being reconfigurable, predominantly 3D-printed mechanical components, having a simple assembly, and compatibility with standard 24 V PLC hardware, so students can assemble, troubleshoot, and extend the platform within the course.

To ensure reproducibility and student access to reference materials, the project leverages established open documentation repositories for each core technology. The RevPI DIO, AIO, and Core SE hardware documentation is available through the RevolutionPi GitLab repository and official product manuals (RevolutionPi, 2025). OpenPLC Editor IDE documentation and runtime source code reside in the OpenPLC Github repository, providing complete transparency for ladder logic and function block programming (OpenPLC, 2025). ProtoTwin digital twin software references are hosted in their developer documentation portal, supporting seamless hardware-digital twin integration (ProtoTwin, 2025). Finally, the baseline Fischertechnik sorting line module specifications, including wiring diagrams and I/O maps, are documented in the official technical datasheet (fischertechnik, n.d.-a).

A key result from the background research is the importance of aligning both the hardware and software of the platform with industrial standards for PLC systems. IEC 61131-2 defines the electrical and environmental requirements for PLC equipment, including the use of 24 V DC as a standard control voltage for inputs and outputs, which supports safe, reliable integration of field devices with industrial controllers (IEC 61131-2, 2025). In parallel, IEC 61131-3 defines the basic software architecture and programing languages for programmable controllers, specifying a unified suite of languages such as ladder diagram, function block diagram, and structured text, along with standard data types and program organization units (IEC 61131-3, 2025). Taken together, these standards lead directly to a specific requirement for the project. The tabletop cell shall be controllable by a 24 V PLC that complies with IEC 61131-2 and supports at least one IEC 61131-3 language, and the control logic and documentation shall be organized according to the IEC 61131-3 model of tasks, programs, and function blocks with source/sink style DIO aligned to the Fischertechnik model, sinking inputs accepting current from sensors to PLC ground, sourcing outputs providing +24V to actuators (fischertechnik, n.d.-a). Aligning the open-source line sorter with IEC 61131-2 and IEC 61131-3 ensures that the students' experience with the training platform is directly transferable to industrial PLC hardware and software environments they will encounter in professional practices.

2.0 Problem Statement

The problem this project addresses was the need to design a low cost, reconfigurable tabletop automation system that can provide industry relevant information while remaining accessible and extensible for future academic changes.

The project focused on developing a minimum cost tabletop assembly line capable of sorting small colored cylindrical workpieces using a 24 V industrial PLC, sensors, actuators, and a moving conveyor belt. The solution integrated mechanical, electrical, and control systems into a cohesive platform that supports the required learning objectives. In scope activities initially included mechanical design using primarily 3D printed components, PLC based control logic, industrial sensor integration, and development of a digital twin using ProtoTwin (ProtoTwin, 2025). However, throughout the course of the project. Control using OpenPLC was removed, and the Digital Twin was changed to be a simulation. Out of scope elements include full scale industrial automation, the ability to sort LEGO bricks, and high speed or high load manufacturing operations.

The primary design element and degree of freedom in this project can be found in the overall design of the tabletop automation device. While the function is fixed (sorting-colored workpieces), our team has created flexibility in mechanical layout, module interfaces, sensing and actuation methods, PLC logic structure, and the level of precision for the digital twin. This openness allowed multiple design concepts to be explored and evaluated, from which a final solution was selected based on performance, cost, usability, and academic value.

The expected benefits of the proposed solution include significant cost reduction compared to commercial training systems, improved instructional quality through physical interaction with real industrial hardware, reduced setup and maintenance complexity, and increased flexibility for future course integration. From a performance perspective, the system is capable of reliable sorting operations suitable for classroom use. From a quality perspective, the device will emphasize robustness, repeatability, and clear documentation. In terms of time and efficiency, the modular design is expected to reduce setup, reconfiguration, and troubleshooting effort for both students and laboratory staff.

To evaluate the overall project success, the Key Performance Indicator (KPI) was defined as the total system build cost per unit. This KPI directly aligns with the primary project driver, affordability, and reflects the system's scalability for educational development. The target threshold for success is a total build cost of $100 per unit, with an absolute maximum allowable cost of $500 per unit. Meeting this KPI ensured that the solution meaningfully improves upon the current commercial devices and enables widespread adoption with the academic community.

Several stakeholders are affected by or have a vested interest in the outcome of this project. Primary stakeholders include faculty members, students, laboratory staff, and future course designers. Based on these stakeholders' perspectives, the following needs have been identified and have been the foundation for subsequent engineering requirements:

1. Affordability: The system should be low cost to allow multiple units to be used in a single lab.
2. Modularity: The platform should allow components to be rearranged, replaced, or expanded upon.
3. Comprehensive Documentation: The solution should include clear and complete documentation.
4. Ease of Use and Maintenance: The system should be easy for staff and students to assemble and operate on

PennState
College of Engineering

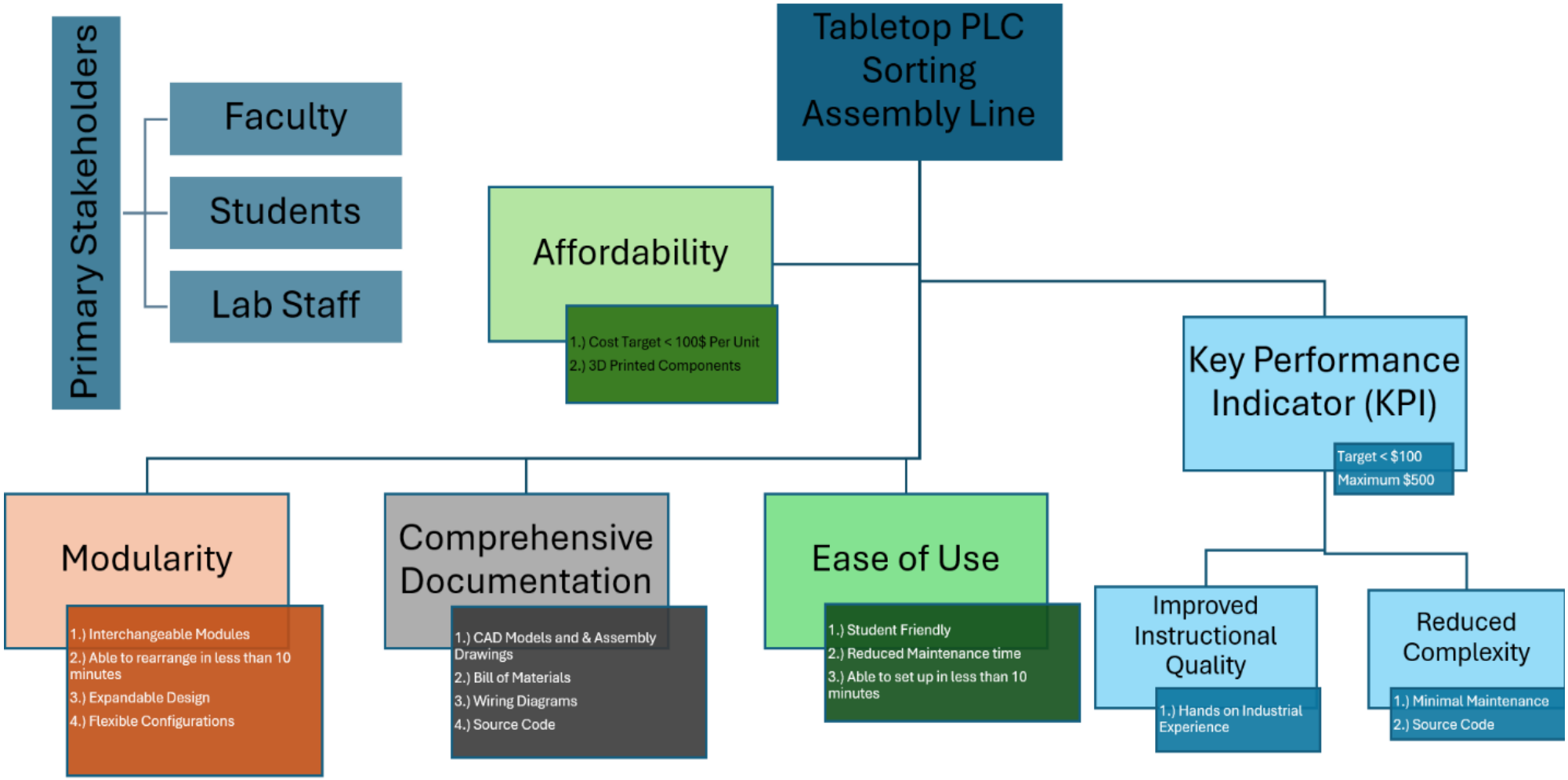

Figure 2. Problem Statement

3.0 Project Requirements

The requirements table shown below represents our team's original view of what was expected of the final prototype by the end of the project date, and no revisions were made to the requirements from the original Statement of Work. It identifies the most critical design and programming elements, which include the cost, performance of the prototype, level of modularity of the final design, user safety, and the digital twin requirements. Also shown in the table are some of the "stretch" goals, which represent elements that the final design should implement if time and budget constraints allow for it. These included, being largely 3D printed and having the capability to sort LEGO Brick.

During the Alpha and Beta prototype stages, the most challenging requirement to address was creating standard mechanical and electrical connectors to enable modularity. Several of the stretch goals also presented challenges due to the time and amount of work required to accomplish them. These included the goals of incorporating a hopper and enabling compatibility with 120 V AC input, both of which were ultimately not achieved within the project timeframe.

In the third columns of Table 1 and Table 2, each requirement is categorized as to which part of the project it addresses. These categories show how the project addressed the different needs of the stakeholders including the sponsor regarding the constraints, budget, and schedule, and the public for the environmental, social, and safety requirements.

The final columns of Table 1 and Table 2 provide additional context for the requirements. This column describes each requirement in more detail where necessary, as well as discussing where the requirement originated from, typically from the sponsor.

All requirements have been incorporated into the Verification Cross Reference Matric found in Section 6.1 in Tables 6, 7, and 8.

Table 1. Table of Requirements Version 2, Last Modified 2/1/26.

#	Requirement	Type	Additional Details
1	Cost per unit shall be between ~$100 and ~$500	Economic	Provided by the Sponsor
2	Device shall be designed on 24V standard system architecture	Standard	The IEC defines 24 V DC as the standard Voltage to be used with PLCs. (IEC 61131-2)
3	Device shall be programmed with Function block programming.	Constraint	IEC 61131-3 defines the standard programming languages, data types, and program organization units (POUs) for industrial PLCs (IEC 61131-3)
4	Structure should be largely 3D Printed out of common materials, such as PLA.	Resources, Global	Provided by the Sponsor
5	Final product shall be Open Sourced with BOM, CAD models, and source code provided on GitHub.	Global, Social	Provided by the Sponsor
6	The design shall have a standard mechanical and electrical connector to enable modularity by extending workflows, and by allowing component replacement in under 30 minutes.	Constraint	In the case that parts break, they can be easily replaced. The sponsor requested that the design must be easy to build upon and manipulate.
7	Device shall be able to sort blue, white, and red workpieces that are 1 inch in diameter and half an inch in height.	Constraint	Provided by the Sponsor
8	Final Prototype shall be functional with a demo program.	Constraint	Provided by the Sponsor
9	All Major components should be sourced from PSU Suppliers.	Constraint/Economic	Required to readily access the team's budget, and provided by the Sponsor
10	A digital twin of the final prototype shall be provided utilizing ProtoTwin	Constraint	Provided by the Sponsor
11	Final prototype shall be provided with all wires insulated and grounded, as well as pinch points minimized and labeled.	Public Health, Safety, and Welfare	Given the Open-Source nature of the project and its future use in teaching, it must be safe to assemble and operate.

Table 2. Table of Requirements Version 2, Last Modified 2/1/26.

#	Requirement	Type	Additional Details
12	Final prototype shall be provided with all pinch points minimized and labeled.	Public Health, Safety, and Welfare	As above, since this project will be used in teaching and Open-Sourced, it must be safe to assemble and operate.
13	Components shall be replaceable in under an hour in the event of failure.	Environmental	Replaceable parts help keep the lifetime cost of the product down, as well as increasing its lifespan.
14	A basic simulation of the design shall be provided by the end of the beta stage of the project.	Schedule	Not a true digital twin, but a basic simulation showing progress made in programming and CAD at this point in the project.
15	Final prototype should be able to sort square/rectangular LEGO bricks and plates from 1x1 up to 2x4 studs in size when placed with studs facing upwards. LEGO pieces should be blue, red, or white.	Constraint	Stretch goal
16	Final prototype shall be capable of sorting workpieces at a rate of 15 pieces per minute.	Constraint	Sorting speed/throughput
17	Final prototype shall have a sorting accuracy of 95%.	Constraint	Only 1 in every 20 pieces would be sorted incorrectly.
18	Final prototype should be able to sort pieces being automatically dispensed from a bulk hopper.	Constraint	Stretch goal, pieces would be dispensed 1 at a time.
19	Final prototype should be compatible with 120V AC Input.	Constraint	Stretch goal, this would eliminate the need for a power supply, which would significantly reduce overall cost.
20	Final prototype shall have a standard footprint no larger than that of the Fischertechnik device.	Constraint	Fischertechnik footprint is 15 inches by 10.25 inches.
21	Final prototype shall follow the DIO source/sink layout from the Fischertechnik Device.	Constraint	This will help ensure that individuals experienced with the Fischertechnik device will be able to use our prototype.

3.1 Risk Management

The Hazard Table and Rick Matrix, Table 3 and Figure 3 respectively, presented in this section were developed during the Preliminary Design Review to identify, prioritize, and mitigate the most significant risks to the project's success. Table 3 summarizes each hazard by type, proposed mitigation, strategy, likelihood, severity, and total risk score. Figure 3 displayed the Risk Matrix, which plots each hazard before and after mitigation to visualize the reduction in the overall exposure score.

Of the risks identified, Risk ID 3 carried the highest pre-mitigation score of 9 and proved to be the most consequential over the course of the project. Despite our efforts, PCB fabrication, express shipping costs, as well as the culmination of other minor components, caused the actual single prototype cost to go over the target KPI of $100. Risks 2a and 4 also occurred during the project. These were attempted to be mitigated by early integrating checkpoints and prioritizing PSU sourced suppliers however shipping delays, from PSU sourced suppliers, for the PCB presented full hardware-software integration until late in the project, limiting the ProtoTwin (ProtoTwin, 2025) to a functional simulation rather than a true digital twin in addition to causing delays for the testing phase. Risk 1a was partially realized as the system achieved a 97.2% color sorting accuracy but fell short of the 15 pieces per minute throughput requirement due to PLC logic limitations; the PLC control program was unable to keep track of multiple pucks with the same counter block after passing through the camera sensor. Risk 5a was successfully mitigated with no safety incidents occurring during assembly. The remaining low score risks did not affect the project's outcome.

Table 3. Hazard Table

ID #	Type	Hazard	Mitigation	Likelihood	Severity	Total Risk Score
1a	Technical	Sorting Accuracy or Throughput not met	Conduct beta testing and iterative calibration	2	3	6
1b	Technical	Performance risk (post mitigation)		1	3	3
2a	Schedule	Integration delays between hardware & digital twin	Establish early integration checkpoints	2	3	6
2b	Schedule	Integration delay (post mitigation)		1	3	3
3	Economic	Prototype exceeds $100 KPI	Maintain updated bill of materials and prioritize off the shelf components	3	3	9
3a	Economic	KPI post mitigation		2	2	4
4	Global	Supply chain delays for components	Prioritize PSU-sourced suppliers and order long-lead items early	2	3	6
4a	Global	Supply chain delays (post mitigation)		1	3	3
5a	Public Safety	Conveyor or actuator pinch points	Minimize and label pinch points as well as include safety information	2	3	6
5b	Public Safety	Pinch point injury (post mitigation)		1	3	3
6	Cultural/Societal	Open-source system perceived as lower quality	Emphasize IEC 61131-2/3 compliance and professional documentation	1	2	2
7	Environmental	Material waste from iterative 3D printing	Optimize CAD before printing and recycle failed prints	2	1	2
8	Public Welfare	Poor documentation reduces usability	Publish complete GitHub documentation and labeled diagrams	1	2	2
9	Public Health	Electrical exposure or wiring issues.	Insulate all wiring and follow 24V IEC standards	1	3	3

Likelihood \ Severity	1	2	3
1		6,8	1b,2b,4a,5b,9
2	7	3a	1a,2a,4,5a
3			3

Figure 3. Risk Matrix

4.0 Approach

We approached the project by first studying the existing Fischertechnik device (fischertechnik, 2016), as well as familiarizing ourselves with CODESYS (CODESYS, 2026), and Function Block/Ladder Logic programming. This step was essential to understanding our task, as well as for brainstorming ways in which we could innovate with our device. During this time, we recognized a need for more distinct sub teams for the three main elements of the project, Mechanical, Electrical, and Programming. Mechanical would be responsible for designing and assembling the main structure of the device, including the belt, electrical mounts, and baseplate. Electrical would be responsible for creating the PCBA needed to properly power and connect the motors and sensors to the RevPi (RevolutionPi, 2025). Programming would be responsible for adapting existing code for the Fischertechnik device (fischertechnik, 2016) to work with the selected components, as well as creating a digital "twin" to potentially aid in "virtual commissioning" of the device before physical creation.

The ideation process was primarily focused on looking for ways that the prototype could improve upon the Fischertechnik device (fischertechnik, 2016) by being more modular and affordable, while keeping the operation of the device very similar. This brainstorming led the team to several key design variations from the Fischertechnik design (fischertechnik, 2016). Instead of using pneumatic pushers to derail pucks, it was decided to use servos to lower both the cost and complexity of the design. Another key design variation was using a USB camera for color sensing, rather than a phototransistor. This creates the future capability to use machine learning to sense things other than color, such as size, shape, etc. Provided below is the decision matrix that was used to choose which camera we used for the color sensing. Overall, it was decided to use the DFRobot Fit0729 camera module as the camera sensor. Though it was slightly more expensive than other options, this camera module provided the highest resolution sensor, while allowing for connectivity through a 4-pin connector or USB-A, allowing for direct integration into the PCB or rapid prototyping by connecting to the RevPIs USB port (RevolutionPi, 2025).

	Weight	RPi Camera 2	ESP32 Timer Camera	DFRobot Fit0729	Adafruit OV5640 Breakout Board
Cost	4	5	5	4	5
Sensor Resolution	1	5	3	5	4
Ease of Use ("plug and playability")	4	0	3	5	1
Ease of Use PCB Implementation	3	0	4	5	4
Total Score		25	47	56	40

Table 4. Camera Decision Matrix

The team's concept selection process was focused on the mechanical portion of the project, particularly in deciding on how the servos should be used to derail pucks from the belt. The three concepts the team decided between were a simple lever arm, a pusher mechanism using a mechanical linkage, and the pneumatic pusher used by the Fischertechnik device (fischertechnik, 2016).

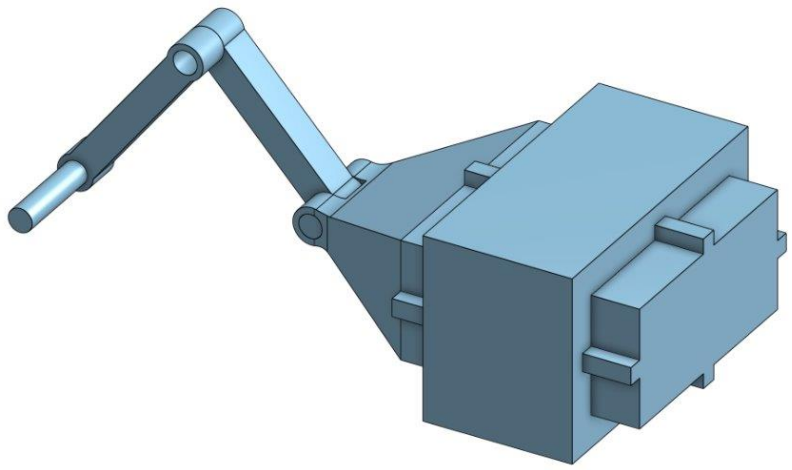

Figure 4. Linked Pusher CAD

	Weight	Lever Arm	Linked Pusher	Pneumatic Pusher
Cost	3	10	8	3
Similarity to existing design	2	3	7	10
Complexity	1	4	3	3
Total Score		40	41	32

Table 5. Derailer Decision Matrix

From this decision matrix it was initially decided to go with the Linked Pusher, however, after further consulting with our sponsor, the team decided that we had weighed the "Similarity to existing design" too heavily and pivoted to a Lever Arm design for simplicity. Other concepts that were considered were regarding the belt. Initially, we were planning to make a modular belt or buy a belt from an automation supplier. However, it was decided that we would use a LEGO belt, which was affordable, and easy to make shorter or longer based on the number of bays.

Following ideation and concept selection, we produced our Alpha Prototypes. These were high level prototypes intended to demonstrate the basis of our planning and understanding of the task. The Mechanical team created a top-down model of our intended device layout, as well as several 3D CAD designs for our derailers, shown above in Figure 4. The electrical team created a preliminary schematic for the PCB, shown in Figure 5. The Programming team created a ProtoTwin (ProtoTwin, 2025) simulation to demonstrate their increasing knowledge of Function Block programming and ProtoTwin (ProtoTwin, 2025), as a "Hello World" exercise. These prototypes helped to align expectations with our sponsor, as well as ensure that the project was proceeding as planned at this point in the semester.

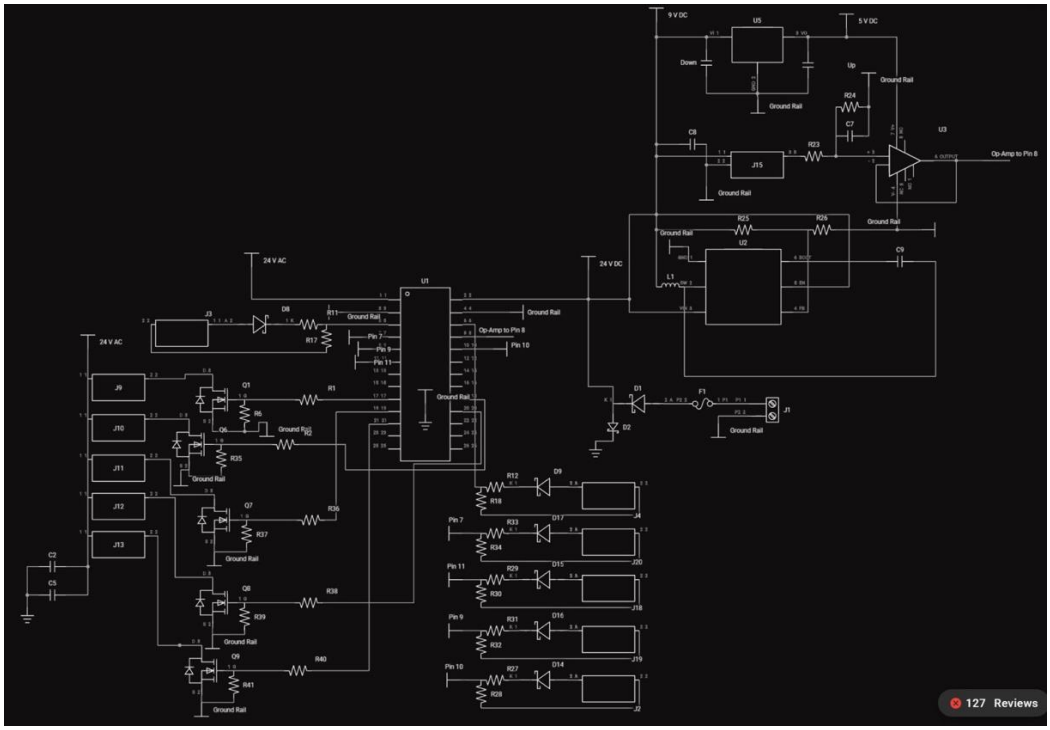

Figure 5. PCBA Schematic Alpha Prototype

Following the Alpha Prototypes and the feedback received from the sponsor, work began on the Beta Prototypes. These included significantly greater detailed designs that showed a more representative look at what our final prototype could look like. For the Mechanical team, this included a CAD model of the system at the time showing a potential orientation for the servo motors, shown in Figure 6. This also included the rail connector system which allows for easy component replacement of most main components. This model was still missing several key components, such as mounting solutions for the camera, break beams, and microswitch mount. However, this beta prototype provided a foundation on which would evolve into our Final Prototype.

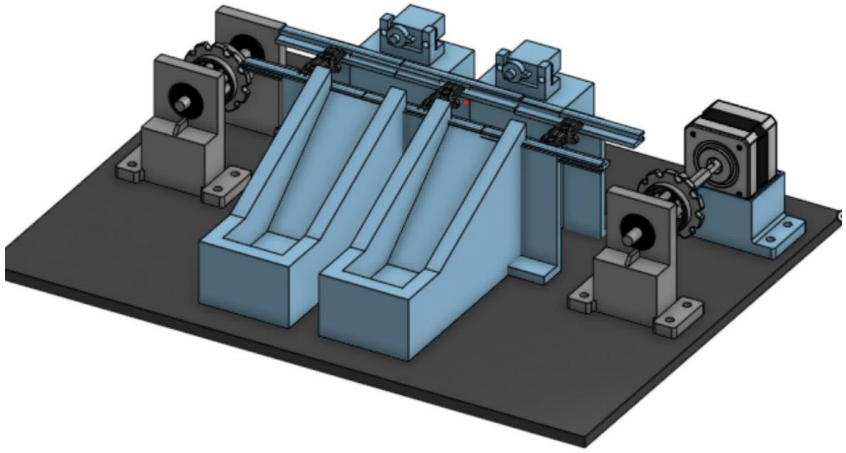

Figure 6. 3D CAD Model Beta Prototype

The Electrical Beta was a far more complete schematic of our custom PCBA, designed with our ordered components in mind. It incorporated uniform connectors to interface with the board in the form of JST-XH connectors. It also featured a thermal evaluation test where the board was tested through a power delivery analysis simulation in order to find hot spots on the board. This resulted in the movement of several high power-consuming integrated circuits on the board to cooler spots to reach safe operational temperatures. The programming Beta was a more representative ProtoTwin simulation (ProtoTwin, 2025), demonstrating our implementation of color detection with Function Block programming. These Beta prototypes proved crucial towards identifying potential issues with our designs, such as 3D Print tolerances, and thermal control on the PCBA.

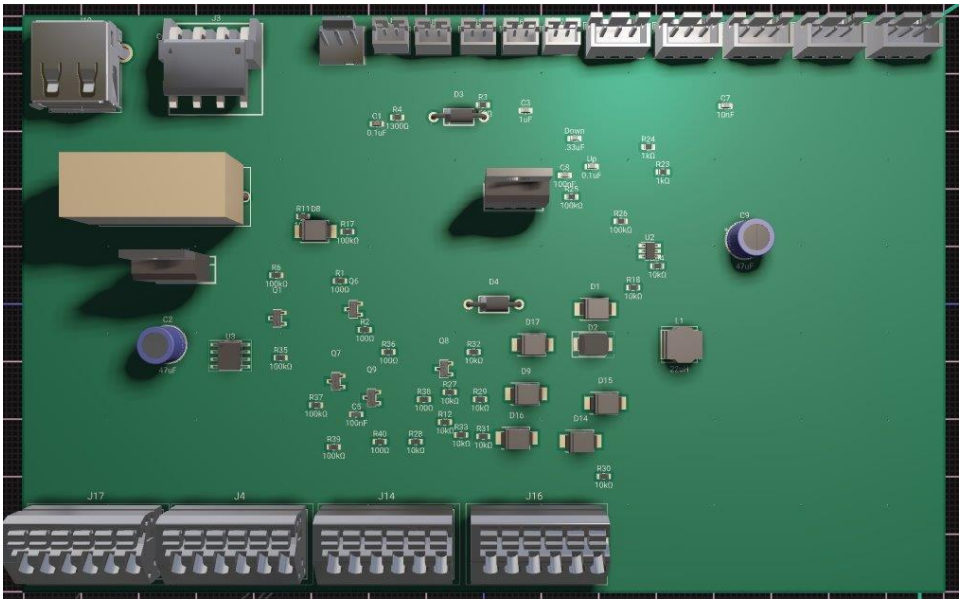

Figure 7. PCBA Beta Prototype

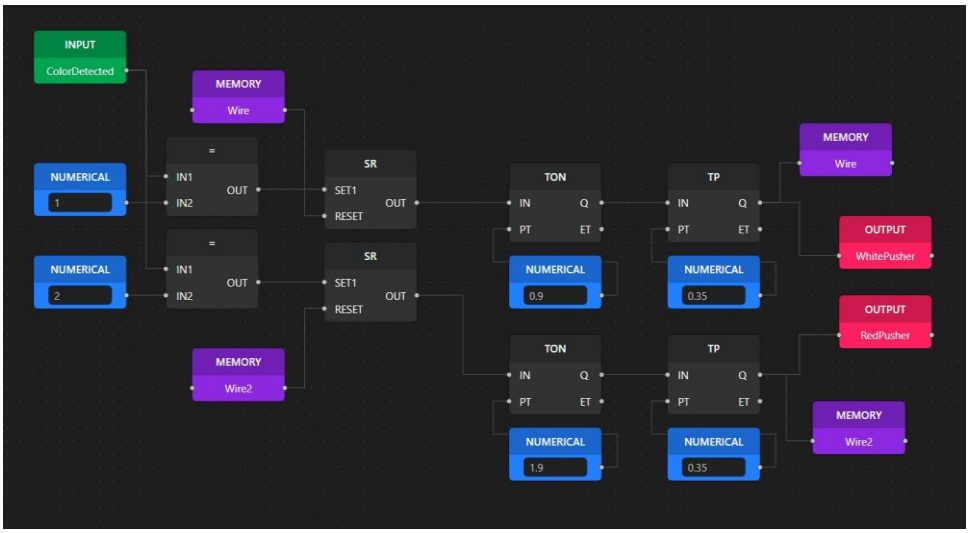

Figure 8. ProtoTwin Beta Prototype Function Block Code

4.1 Schedule Narrative

The Gantt Chart displays the six different phases of the project. Within the first two phases, Empathize and Define, the most important tasks were establishing contact with the sponsor and alumni coach and completing the Statement of Work. This document summarized the key deliverables and set the standards the project needed to meet by the end of the program.

Following this, the Ideate phase reflects the sub-team strategy discussed in the Approach section of this report. The group was divided into three teams: Mechanical, Electrical, and Software. This allowed the group to work in parallel with each team's respective Alpha prototypes. Key milestones during this phase included the use of Decision Matrices to select the camera sensor and derailer mechanism. This parallel structure proved to be one of the most effective decisions made during the project, allowing all three prototypes to be complete efficiently enabling the team to move on to the Prototype phase without any delays.

Within the Prototype phase, the most significant accomplishment was the construction of the Beta Prototypes. Each sub-team continued working in parallel, producing more detailed and representative designs that laid the groundwork for final development. During this time, the team encountered delays due to disruptions in the ordering and delivery of key electrical components. These were mitigated by continuing development on unaffected areas of the project and advancing to subsequent tasks where possible, allowing the team to remain largely on schedule despite the setbacks.

The Test phase brought the most complications for the team. Delayed arrival of the PCBA and its associated electrical components created a significant bottleneck, as the mechanical and software components could not be fully integrated or tested until the board arrived. This meant that issues in both the mechanics and software went unidentified for longer than anticipated. Additionally, the full mechanical assembly of the Sortinator required extensive trial and error to achieve tolerances that allowed all moving parts to fit together properly while still being hand-assembled. This included numerous iterations of the conveyor belt support legs and the baseplate. To push through these challenges, the team delegated tasks strategically, ensuring that each sub-team was always making progress in whatever area was accessible to them at the time.

The Deliver phase encompasses final deliverables including the Showcase Poster, Final Reports, GitHub finalization, Final CAD Assembly and BOM, and the Program Closeout Review. As of April 26th, each of these deliverables have been submitted.

As mentioned, the program schedule featured a number of changes and additions over the course of the project. These changes are highlighted in blue on the Gantt chart and reflect the team's response to unforeseen complications, particularly during the Test phase. Added tasks include Mechanical Assembly, Finalize and Order PCB, CAD Assembly for ProtoTwin (ProtoTwin, 2025), Connect PCB, Adding Functionality to the CAD Model, Programming PLC with New Function Code, PCB Connection and Test of Wiring, and Test Code on Sortinator. These additions do not reflect a lack of planning, but rather the team's willingness to adapt and take on additional work to ensure project success. In total, the team completed a considerable amount of work beyond what was outlined in the original proposal.

4.2 Individual Contributions

Mechanical

Benjamin Johnston – Designed parts for the main structure, as well as tested and iterated upon them once they were printed. Also functioned as the team lead, organizing meetings and communicating with the Sponsor/Advisor and Alumni Coach.

Daniel Pellizzari – Designed parts for the main structure, aided in the testing and reiteration of printed parts. Also served as the Program Manager developing, tracking, and updating the project schedule as work progressed as well as ensuring the team remained on schedule.

Nicholas Savoca – Designed parts for digital twin as well as main structure. Aided in purchasing and assembly of required parts for prototypes. Put together final assembly as well as reviewed and edited documents for canvas submission.

Electronical

Avie Vasantlal – Designed the PCB (Printed Circuit Board) to drive the Sortinator using 24V architecture and responsible for soldering and assembling the entire electrical system. Created the initial iteration of the computer vision color sensing using Python and aided in the adjustment needed to port it to CODESYS (CODESYS, 2026). Aided in part selection needed for the prototypes and final iteration.

Software

Varnikaa Arora – Programming the ESP microcontrollers, adapting CAD models for the ProtoTwin (ProtoTwin, 2025) simulation, and testing new technologies which influenced decisions moving forwards. Managed GitHub repository and set up documentation for Fischertechnik (fischertechnik, 2016) and CODESYS (CODESYS, 2026). One of two editors for team deliverables.

Anthony Ottaviano – PLC Programming as well as development of the ProtoTwin simulation (ProtoTwin, 2025). Developed a Function Block Diagram control program for the Sortinator. Created digital simulation of the Sortinator and designed the control logic of the simulation in Function Block Diagram. Also served as the Treasurer, submitting orders and keeping track of project expenditures.

PennState
College of Engineering

5.0 Schedule

Task Name	Start	Finish	Duration	% Complete	Assigned To
Empathize	**01/12/26**	**01/12/26**	**1d**	**100%**	
Contact Sponsor and arrange meeting	01/12/26	01/12/26	1d	100%	BJ Benjamin Johnston
Contact Alumni Coach and arrange recurring meeting	01/12/26	01/12/26	1d	100%	BJ Benjamin Johnston
Define	**01/19/26**	**02/08/26**	**21d**	**100%**	
Statement of Work delivered (V1 and V2)	01/19/26	02/01/26	14d	100%	Team
Budget Portion	01/19/26	02/01/26	14d	100%	NS Nicholas Savoca
Requirements V1	01/19/26	02/01/26	14d	100%	BJ Benjamin Johnston
Proofread and Submit Final Papers	01/19/26	02/01/26	14d	100%	AO Anthony Ottaviano
Risk Sumary	01/19/26	02/01/26	14d	100%	DP Daniel Pellizzari
Background and Problem Definition	01/19/26	02/01/26	14d	100%	VA Varnikaa Arora
Program Initiation Review (PIR)	02/02/26	02/08/26	7d	100%	Team
Ideate	**02/02/26**	**02/22/26**	**21d**	**100%**	
Mechanical Alpha prototype	02/02/26	02/11/26	10d	100%	DP Daniel Pellizzari
Electrical Alpha prototype	02/02/26	02/11/26	10d	100%	A Avie Vasantlal
Software Alpha prototype	02/02/26	02/11/26	10d	100%	VA Varnikaa Arora
Buy Camera Sensor	02/02/26	02/11/26	10d	100%	AO Anthony Ottaviano
Preliminary Design Review (PDR)	02/16/26	02/22/26	7d	100%	Team
Prototype	**02/16/26**	**03/08/26**	**21d**	**100%**	
Order Parts needed for Beta prototypes	02/16/26	02/16/26	1d	100%	AO Anthony Ottaviano
Mechanical Beta prototype	02/16/26	02/26/26	11d	100%	DP Daniel Pellizzari
Electrical Beta prototype	02/16/26	02/26/26	11d	100%	A Avie Vasantlal
Software Beta prototype	02/16/26	02/26/26	11d	100%	VA Varnikaa Arora
Order all parts needed for final prototype	03/05/26	03/05/26	1d	100%	AO Anthony Ottaviano
Critical Design Review (CDR)	03/02/26	03/08/26	7d	100%	Team

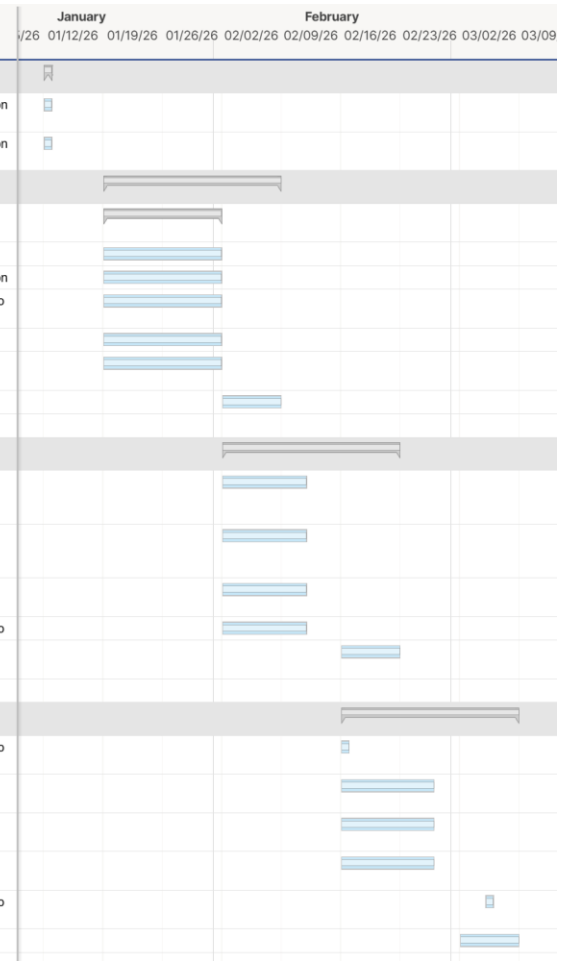

Figure 9. Gantt Chart (1/2)

Prototype	**02/16/26**	**03/08/26**	**21d**	**100%**	
Order Parts needed for Beta prototypes	02/16/26	02/16/26	1d	100%	AO Anthony Ottaviano
Mechanical Beta prototype	02/16/26	02/26/26	11d	100%	DP Daniel Pellizzari
Electrical Beta prototype	02/16/26	02/26/26	11d	100%	A Avie Vasantlal
Software Beta prototype	02/16/26	02/26/26	11d	100%	VA Varnikaa Arora
Order all parts needed for final prototype	03/05/26	03/05/26	1d	100%	AO Anthony Ottaviano
Critical Design Review (CDR)	03/02/26	03/08/26	7d	100%	Team
Test	**03/02/26**	**04/23/26**	**53d**	**92%**	
Testing of Beta prototype	03/02/26	03/08/26	7d	100%	NS Nicholas Savoca
Mechanical Assembly Complete	03/16/26	03/24/26	9d	100%	NS Nicholas Savoca
Finalize and Order PCB	03/16/26	03/24/26	9d	100%	NS Nicholas Savoca
CAD assembly complete for ProtoTwin	03/16/26	03/24/26	9d	100%	NS Nicholas Savoca
Feedback Roundtable	03/23/26	03/29/26	7d	100%	Team
Connect PCB	03/24/26	04/11/26	19d	100%	Team
Adding functionality to new CAD model on proto twin	03/24/26	04/07/26	15d	100%	AO Anthony Ottaviano
Programing PLC with new function code	03/31/26	04/14/26	15d	100%	VA Varnikaa Arora
PCB connection and test of wiring.	04/16/26	04/23/26	8d	100%	A Avie Vasantlal
Test code on Sortinator	04/16/26	04/23/26	8d	0%	AO Anthony Ottaviano
Deliver	**04/13/26**	**05/03/26**	**21d**	**100%**	
Showcase Poster	04/13/26	04/26/26	14d	100%	Team
Final Report V1	04/13/26	04/19/26	7d	100%	Team
Finalize GitHub	04/16/26	04/23/26	8d	100%	Team
Final CAD Assemble and BOM	04/16/26	04/23/26	8d	100%	Team
Final Report V2	04/20/26	04/26/26	7d	100%	Team
Program Closeout Review (PCR)	04/27/26	05/03/26	7d	100%	Team

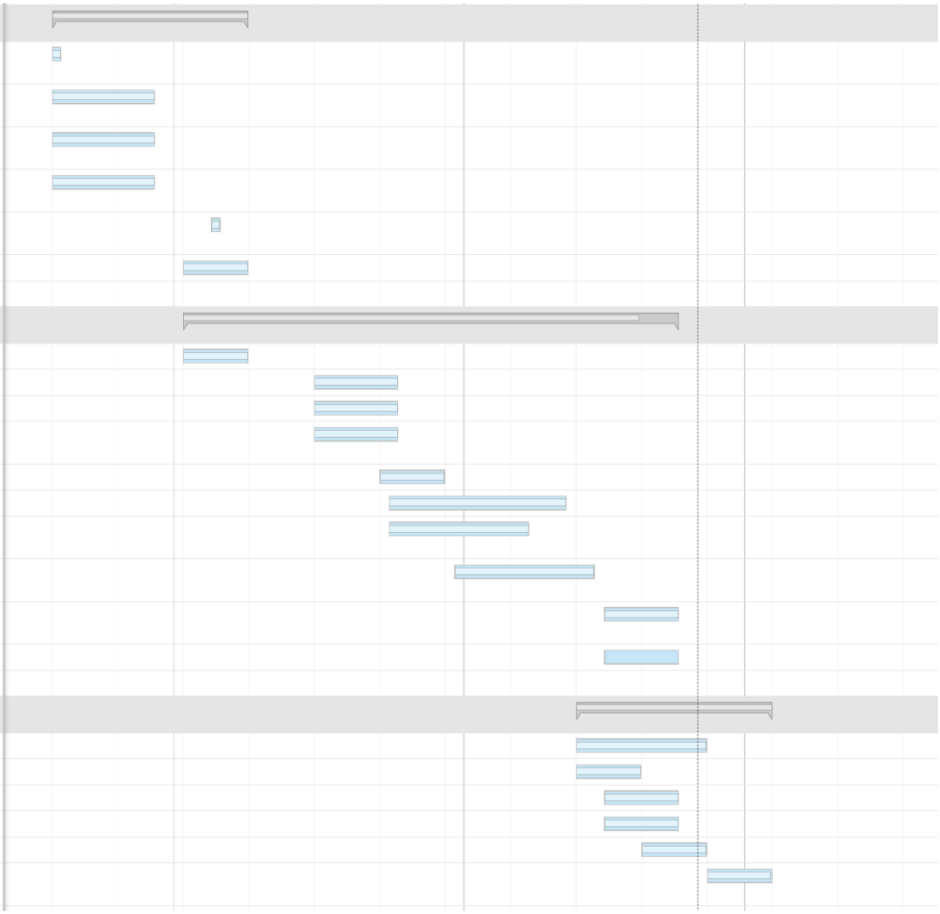

Figure 10. Gantt Chart (2/2)

6.0 Results

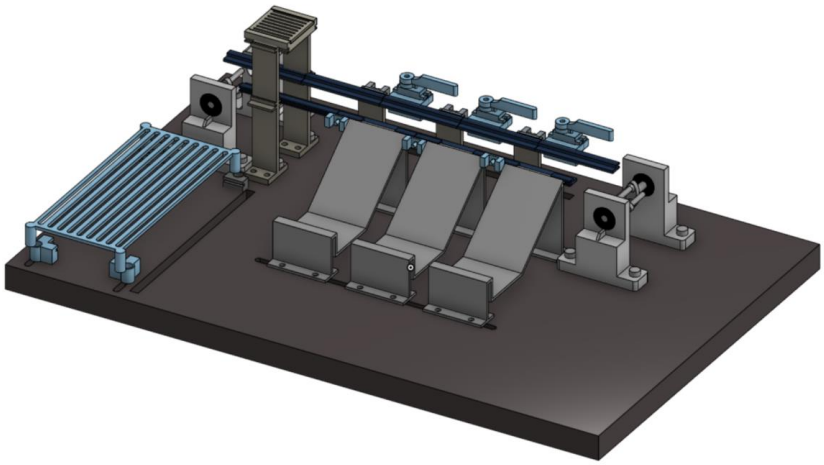

Figure 11. Final CAD Assembly

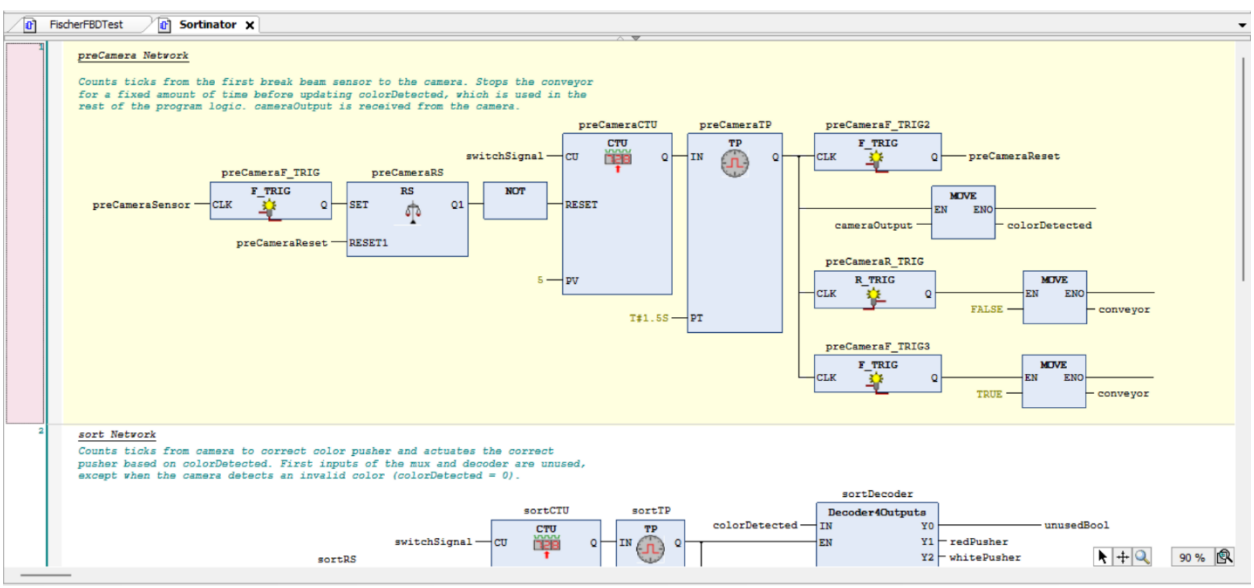

Figure 12. PLC FBD Control Program in CODESYS

For the PLC, we developed a control program in function block diagram. This program should be helpful for students to understand how to program in this language to automate industrial machines and processes.

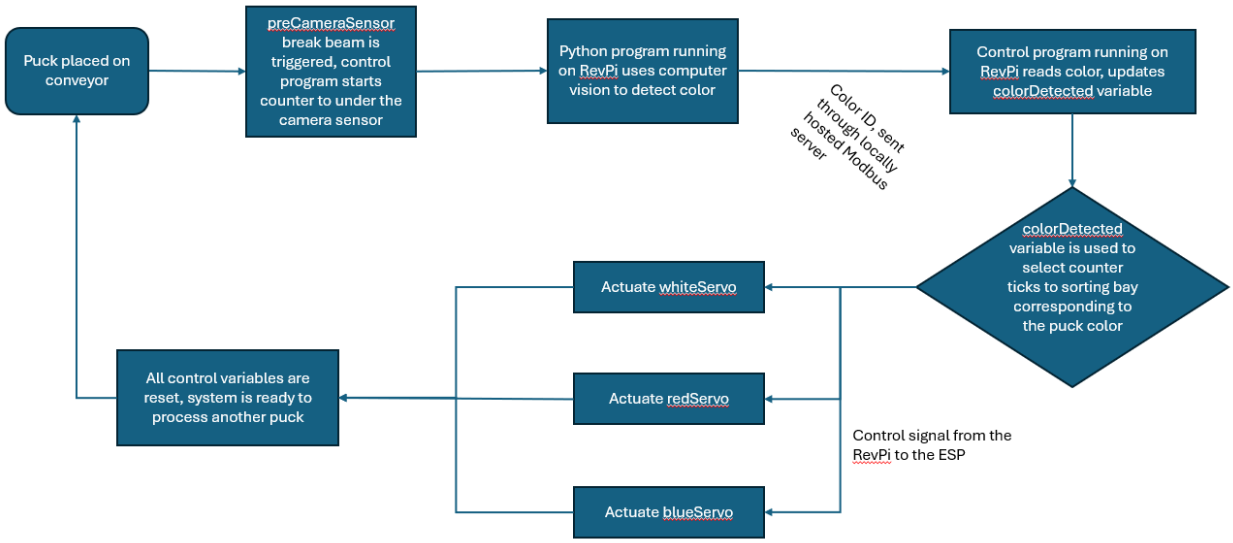

Figure 13. High-level Control System Flowchart

The above diagram illustrates the control system of the Sortinator at a high level. First, a puck is placed in the conveyor. Then, when the puck triggers the first break beam sensor before the camera, the control program begins a counter that uses the microswitch to track how far the puck has moved. Then, the puck is stopped under the camera module, and a Python program running on the RevPi (RevolutionPi, 2025) uses the input from the camera and computer vision to detect the color. The program then sends the ID of the color detected to the RevPi (RevolutionPi, 2025) through a locally hosted Modbus server. The colorDetected variable is updated based on the color read, which is used to determine which servo is actuated. Then, after the counter determines that a puck is in front of the correct sorting bay, a control signal is sent out from the RevPi (RevolutionPi, 2025) to actuate the correct servo. Lastly, all control variables are reset, readying the system to process another puck.

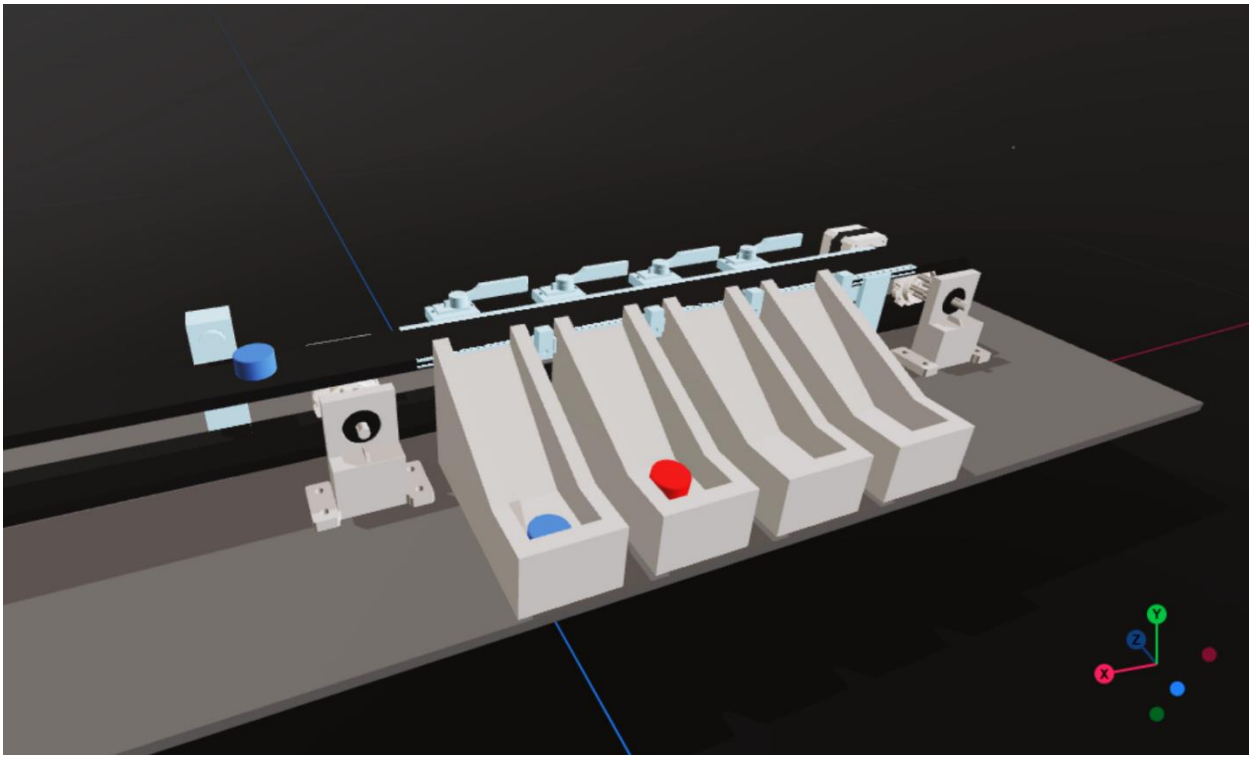

Figure 14. Screenshot of ProtoTwin Simulation

The ProtoTwin simulation (ProtoTwin, 2025) provides a virtual simulation of the Sortinator. This virtual simulation was somewhat helpful in assisting the software team in their development of the control logic of the Sortinator without a physical prototype. Though ProtoTwin (ProtoTwin, 2025) can be a powerful resource for providing a simulation for testing control logic if set up correctly, adding precise physics and functionality to the CAD models is a time-consuming process, lessening the usefulness of this software for rapid prototyping; for this reason, the simulation differs from the physical prototype in a few key areas. For example, our simulation does not stop the conveyor to read the color, nor does it simulate the microswitch for counting ticks on the conveyor. Due to these differences, in porting the code from the ProtoTwin (ProtoTwin, 2025) to the Sortinator, additional control logic had to be added to address the additional constraints present in the physical model. For those looking to further develop or modify the Sortinator design, this simulation can be used to rapidly test different control logic or mechanical designs without the need for development of a physical prototype, so long as the simulation is modified to more precisely reflect the physical model.

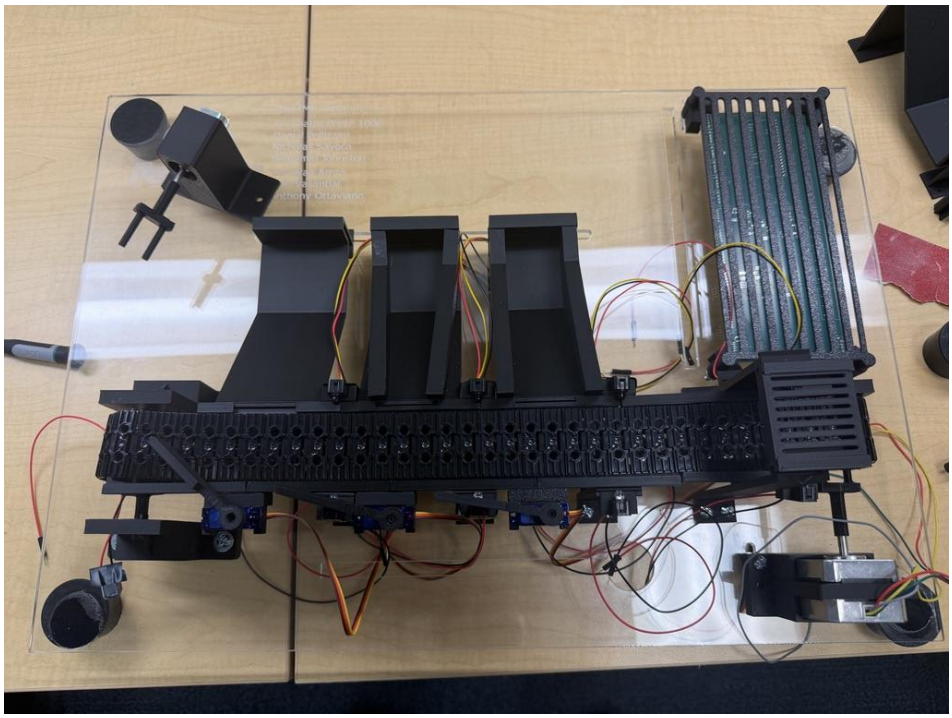

Figure 15. Mechanical Assembly

The final mechanical protype was mounted on an acrylic baseplate which was laser cut and engraved allowing each part to be mounted precisely without any major adjustments. It also features cut out slits for wire management, allowing wires to be out of the way and at no risk of interfering with the conveyor belt. Furthermore, sensitive electronic components such as the PCBA and camera are protected by printed cases.

6.1 Requirements Verification

The Verification Cross-Reference Matrix (VCRM) helps to organize and summarize which requirements have been met by our project, and which have not. There are three potential options, Pass, Fail, or Partial. The chart includes the methods for testing, the success criteria, and the specific result when applicable.

PennState College of Engineering

ID	Description	Verif. Method	Test Procedure	Test Resources	Success Criteria	Results	Score	Note
1	Cost per unit shall be between ~$100 and ~$500	Inspection	Inspect final Budget and BOM	Excel Documents	Final BOM is under $500		Success	Total Cost: $325.97
2	Device shall be designed on 24V standard system architecture	Test	Multisim and Altium	Virtual Oscilloscope and Multimeter	Has an input of 24V and maintains it	23.8 V	Success	
3	Device shall be programmed with Function block programming.	Inspection	Verify code on Codesys	Demonstration files	Demo programs use Function Block programming		Success	Programming was completed using Function Block Code
4	Structure should be largely 3D Printed out of common materials, such as PLA.	Inspection	Check BOM for materials used for each printed component	Excel Documents	3D printed parts are PLA, PETG, or TPU	PLA	Success	All 3D printed parts are PLA
5	Final product shall be Open Sourced with BOM, CAD models, and source code provided on GitHub.	Inspection	Verify that the final BOM, CAD, and Code is stored and provided to our sponsor in the GitHub Repository	GitHub Repository	GitHub repo contains all necessary documents, and is provided to the sponsor.	https://github.com/varnikaa12/PSU-IME-1	Success	
6	The design shall have a standard mechanical and electrical connector to enable modularity by extending workflows, and by allowing component replacement in under 30 minutes.	Test	Utilizing a stop watch several different components should be removed and replaced in under 30 minutes by someone with a basic understanding of the sorters assembly	Stop watch	Is replaced in under 30 minutes	Has rails to easily slide components on and the PCB has Jst headers	Partial	Rails allowed easy component replacement, but baseplate requires drilled/laser cut holes to expand
7	Device shall be able to sort blue, white, and red workpieces that are 1 inch in diameter and half an inch in height.	Test	Utilizing a color sensor to evaluate the color of each workpiece and accurately sorting them based on the identified color.	Camera	95% of workpieces assigned the correct color	97.2% success rate	Success	Tested the trained software model against live video for accuracy

Table 6. Verification Cross-Reference Matrix (1/3)

8	Final Prototype shall be functional with a demo program.	**Demonstration**	**Program should be loaded onto revpi and run with no issues**	**RevPi, demo program, colored pucks**	**95% correct sorting accuracy**		**Partial**	**Physical prototype is functional, demo program is functional using FT device, however there are electrical problems with our device.**
9	All Major components should be sourced from PSU Suppliers.	**Inspection**	**Inspect final Budget and BOM**	**Excel Documents**		**PCB was not available from a PSU approved supplier**	**Partial**	
10	A digital twin of the final prototype shall be provided utilizing ProtoTwin	**Demonstration**	**Verify the functionality of the ProtoTwin digital twin, as well as accuracy to the physical device**	**ProtoTwin**	**Digital twin accurately reflects the physical device, without desyncing**		**Partial**	**Prototwin has been used for code prototyping, however it lacks real-time feedback from a physical PLC, meaning it is a simulation.**
11	Final prototype shall be provided with all wires insulated and grounded.	**Evaluation**	**The wires need to be enclosed properly so ensuring there is no loose copper or silver that is visible and that they are neatly organized. They should also not be able to detach from their ports easily.**	**Terminals on PCB, PLC, and Components**	**Each wires is plugged in and doesn't detach easily.**	**All wires are soldered and housed properly**	**Success**	**All wires have no exposed parts and are insulated with electrical tape or heatshrinks.**
12	Final prototype shall be provided with all pinch points minimized and labeled.	**Inspection**	**Inspect final prototype for uncovered or labled pinch points**		**No identifiable pinch points that are not covered or labled**		**Success**	

Table 7. Verification Cross-Reference Matrix (2/3) *dw*

13	Components shall be replaceable in under an hour in the event of failure.	**Test**	**Utilizing a stopwatch several different components by someone with a basic understanding of the sorters assembly**	**Stopwatch**	**Components (e.g. servos, microswitch) are successfully replaced within an hour**	**Built entire mechanical part in less than an hour**	**Success**	
14	A basic simulation of the design shall be provided by the end of the beta stage of the project.	**Demonstration**	**Verify/showcase functionality of ProtoTwin simulation**	**ProtoTwin**	**Working conveyor, pushers, and color sensors**	**Success**	**Success**	
15	Final prototype should be able to sort square/rectangular LEGO bricks and plates from 1x1 up to 2x4 studs in size when placed with studs facing upwards. LEGO pieces should be blue, red, or white.	Demonstration	Load a demo program that has the ability to sort LEGO pieces, place LEGO pieces on belt in the appropriate orientation.	Demo program, LEGO pieces, hopper	Final prototype is able to consistently sort pieces being dispensed from a hopper.		**Fail**	Not able to create LEGO sorting algorithm in time. The current algorithm can sort by color but cannot distinguish shape or size
16	Final prototype shall be capable of sorting workpieces at a rate of 15 pieces per minute.	Test	Utilizing a stop watch measure the amount of pucks processed in a minute. A set of 5 runs should be conducted to get an average result.	Stop watch	15 or more pucks proccessed in <= 1 minue		Fail	We were unable to test our prototype to evaluate whether this prototype is feasible.
17	Final prototype shall have a sorting accuracy of 95%.	Test	Load a demo program for puck sorting, test with the colored pucks 20 times.	Demo program, red, blue, white pucks	19 out of 20 pieces sorted correctly		Partial	Camera is able to sort with an accuracy greater than 95%, however the prototype is not in a fully functional state.

Table 8. Verification Cross-Reference Matrix (3/4)

18	Final prototype should be able to sort pieces being automatically dispensed from a bulk hopper.	Test	Utilizing a demo program for legosorting and a hopper, test the device's capabilities with sorting components from the hopper	Demo program for LEGOs, Hopper	Prototype is capable of properly sorting pieces.		Fail	We were unable to implement this within the time frame.
19	Final prototype should be compatible with 120V AC Input.	Test	Plug in the AC-to-DC converter into the modules.	AC to DC converter	Device functions properly using the converter.		Success	All that is required is to purchase a 120V AC to 24 V DC convertor
20	Final prototype shall have a standard footprint no larger than that of the Fischertechnik device.	**Inspection**	**Compare length, width, and height measurements to the Fischertechnik device**	Ruler	Footprint is the same size or smaller than the Fischertechnik device	Only larger by screw mounts and spare space on acrylic	Partial	Acrylic footprint is ~2 inches wider than the Fischertechnik footprint.
21	Final prototype shall follow the DIO source/sink layout from the Fischertechnik Device.	Test	Evaluate that each pin is properly routed and there is minimal ringing & overshoot at the inputs	Multisim & Altium	The flyback diodes result in 10% of the rail voltage through the oscilloscope.	Returned 24.3 V	Success	Tested virtually using Altium and physically through breadboard and oscilloscope

Table 9. Verification Cross-Reference Matrix (4/4)

As shown above in the chart above, there are a total of 3 requirements that are not met by the project. The first of which being the capability to sort some types of LEGO pieces with computer vision. We were unable to implement this requirement in time, this was a stretch goal, and the ability to sort the pucks was prioritized. The second requirement that we were unable to meet was the ability to process 15 or more pucks in a minute. This limitation is due in part to the time it takes to process each puck's color, but primarily due to the control logic of the PLC only allowing one puck to be processed at a time. This means that if the camera detects another puck, it will overwrite the logic of the existing color, even if the previous puck hasn't been processed yet. The third requirement that we were unable to meet was using a hopper to dispense pucks. This is another stretch goal, the current device requires the user to place the pucks by hand, and this would have automated this step. We were unable implement this in time, as the team was focused on achieving the core requirements first.

Overall, most requirements have been met, and with future work, the remaining few could likely be met as well.

6.2 Deliverables

Table 10. Deliverables table

ID	Description	Type	Planned Date	Actual Date	Delivery Method
1	Final Prototype	Physical	4/26/26	4/28/26	Showcase Hand-off
2	Bill of Materials	Digital	4/26/26	4/26/26	Final Report (Appendices B and C)
3	CAD Model	Digital	4/26/26	4/28/26	GitHub (link)
4	Source Code (CODESYS project, Python camera program, ESP code)	Digital	4/26/26	4/28/26	GitHub
5	Wiring Diagram	Digital	4/26/26	4/28/26	GitHub
6	ProtoTwin Simulation	Digital	4/26/26	4/28/26	GitHub
7	Assembly Drawings	Digital	4/26/26	Not Achieved	-

All deliverables have been delivered on time, except the stretch goal of assembly drawings of the final prototype.

6.3 Future Work

Though we completed the simulation of the Sortinator in ProtoTwin (ProtoTwin, 2025), we failed to meet the stretch goal of having a true digital twin. The software team planned to finish the digital twin aspect of the ProtoTwin (ProtoTwin, 2025) after making a successful physical prototype. However, we did not anticipate the possibility of shipping delays that made us unable to test on the physical prototype when we wanted to. If we wanted to have a digital twin, we should have switched focus to further development of the ProtoTwin (ProtoTwin, 2025) despite the delays in creating the physical prototype.

Another stretch goal we did not meet within the given timeframe was enabling the Sortinator to sort square and rectangular LEGO bricks that are automatically dispensed from a bulk hopper. In order to implement this in the future, the mechanical design must be expanded to include extra ramps specifically tailored to the LEGO dimensions, along with the creation and integration of the hopper. Also, we believe our requirement to process 15 pieces per minute would not be met due to the latency required to detect and transport each puck down the line, but we did not have a chance to test it to know for certain. Future development can go to optimizing our color-detecting Random Forest classification model, which is in the GitHub repository, to reduce color detection time.

A few hardware and documentation requirements need more progress to fully satisfy the original project scope. The current system is incompatible with a 120V AC input, which means that the future versions should integrate an AC-to-DC converter module to run properly. We also noted that the system's footprint is slightly larger than the Fischertechnik device (fischertechnik, 2016) due to screw mounts and spare acrylic board space, and the PCB had to be sources outside of approved PSU suppliers. Going forward, the mechanical footprint can be optimized, and all final CAD models, BOMs, and source code must be fully organized and published to the GitHub repository to complete the open-source aspect of the project and for us to be able to hand it over to our sponsor.

6.4 Expected Benefits

The Sortinator improves upon the original Fischertechnik sorting line (fischertechnik, 2016) by prioritizing affordability, accessibility, and expandability. The most substantial benefit of this project is its financial impact; we sourced cost-effective industrial components and reduced the cost per unit to $325.97. Compared to the commercial equivalent, which retails for approximately $1,387 (Studica, n.d.), which is a cost reduction of 76.498%. This decrease in cost greatly increases the affordability of this educational tool, making industrial automation training accessible to a broader range of academic institutions.

This solution is unique because of its commitment to an open-source, highly modular architecture. All the materials, schematics, and software associated with the Sortinator are entirely free and open source. The physical prototype was intentionally designed with modularity in mind, allowing anyone to build their own version of the tool, and giving them the option to modify, upgrade, and build upon our baseline based on their needs.

To make sure the system's longevity and scalability, all the project documentation is centrally hosted on GitHub. Our repository will include general instructions on how how to build a complete Sortinator, along with the necessary CAD, BOM, etc files. This level of detailed documentation has benefits such as making it very easy for institutions to manufacture and deploy multiple units for classroom or testing purposes and drastically lowering the barrier to entry for future developers, ensuring that adding new features, sensors, or software integrations would be a straightforward process.

This project greatly improves the affordability and modularity of the original Fischertechnik design (fischertechnik, 2016), providing an effective, adaptable tool to teach students how to program PLCs and automate industrial machines and processes.

7.0 Expenditures

There was a large difference in what we believed our cost would be compared to what we actually spent. The main differences between actual expenditures and proposed expenditures can be explained by express shipping costs from later in the semester. For example, under “PCBs”, we ended up spending $360.99 more than anticipated. This was because we were limited to U.S.-based PSU-recommended suppliers, which were much more expensive than other manufacturers. Additionally, for each set of 3 PCBs, express shipping cost nearly $100 for each order. For “Integrated Circuits and PCB Components”, we ended up spending $197.57 more than anticipated, mainly due to express shipping costs as well. Because reimbursements have not yet been sent out, the budget in Appendix A may be slightly more than the actual final budget. Receipts for some orders have not yet been received for orders from the Learning Factory. In these cases, we have added together listed prices of each item in the order. Because of Penn State’s partnership with suppliers, these cost estimates of these orders are overestimates of the actual costs of these orders.

Acknowledgements

We would like to extend our gratitude to the individuals whose guidance, expertise, and support were instrumental in the progress of our sorting system capstone project.

First and foremost, we would like to thank our Sponsor, Advisor, and Professor, Brian Zajac, for conceptualizing this project and guiding us through its development. He has a passion for the subject matter and knowledge of industry practices. We appreciate his open-door policy and all the insightful feedback and direction he provided during our weekly meetings, from the initial design phases through to our final execution.

We are also extremely grateful to Elijah Gruver, whose technical assistance was indispensable. Elijah provided us with ladder logic code that served as a critical foundation for our software architecture. Also, he provided us with documentation for setting up the Revolution Pi and Fischertechnik tool (fischertechnik, 2016), along with his patience in answering our many questions, which accelerated our timeline. This project would not have reached its current level of success without their dedication and hands-on assistance.

Additionally, we would like to thank our Alumni Coach, Taylor Joseph, for providing ongoing mentorship and industry perspective as a recent graduate who also went through the whole capstone program, along with Danielle Snyder for her assistance in ordering parts through Penn State.

References

ABB. (n.d.). Overview of the IEC 61131 standard [Data sheet 2101127-AB]. https://library.e.abb.com/public/81478a314e1386d1c1257b1a005b0fc0/2101127.pdf

CODESYS GmbH. (2026). CODESYS Development System (Version X.X) [Computer software]. Kempten, Germany. CODESYS Official Site.

fischertechnik. (2025, December). plc_training_factory_24v: Training Factory Industry 4.0 (24V) [Source code]. GitHub. https://github.com/fischertechnik/plc_training_factory_24v

fischertechnik. (2016, January). Sorting Line with Color Detection 24V [Product page]. fischertechnik. https://www.fischertechnik.de/en/products/industry-and-universities/training-models/536633-sorting-line-with-color-detection-24v[VA23.1]

fischertechnik. (n.d.-a). TDB_536633-SORTIERSTRECKE_MIT_FARBERKENNUNG_24V [Technical datasheet]. https://fiproductmedia.azureedge.net/media/Certification%20Documents/Technical%20Datasheets/fischertechnik/TDB_536633-SORTIERSTRECKE_MIT_FARBERKENNUNG_24V.pdf[VA24.1]

OpenPLC. (2025). OpenPLC Editor and runtime documentation. GitHub. https://github.com/thiagoralves/OpenPLC_Editor[VA25.1]

ProtoTwin. (2025). ProtoTwin digital twin platform documentation. https://prototwin.com/docs

[VA26.1]RevolutionPi. (2025). RevPi DIO, AIO, and Core SE technical documentation. GitLab. https://gitlab.com/revolutionpi/

Studica. (n.d.). fischertechnik Sorting Line with Color Detection 24V [Product page]. https://www.studica.com/sorting-line [VA27.1]

Appendix A: Budget

PSU IE Capstone #1

Brian Zajac
Ben Johnston

Project Start Date	1/20/2026
Last Updated	3/31/2026
Starting Budget	$ 1,250.00
Budget Left	$ 180.46

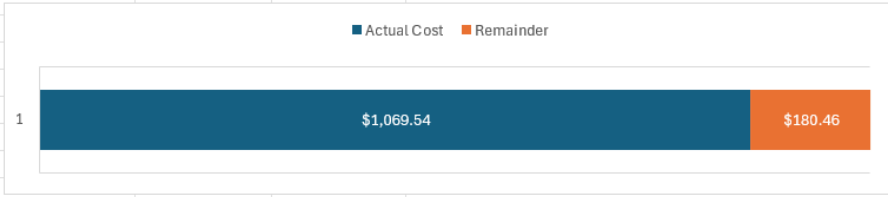

Budget Item	Proposed	Actual Cost	Remainder	Source	Notes
3D Printer Material	$ 30.00	$ -	$ 30.00	Estimate	Used material on hand
Camera Sensor	$ 25.00	$ 39.90	$ (14.90)	Comparable	DFRobot FIT0729 Camera Module
Motors	$ 100.00	$ 69.75	$ 30.25	Comparable	Servomotors, stepper motor, and DC motor
Spare Parts	$ 600.00	$ 247.01	$ 352.99	Estimate	Contingency reserve allocated to account for design iteration, rework, and potential component replacement during prototyping. Includes miscellaneous parts and spares for mechanical components and spare sensors. Spare parts for the PCB are accounted for under Integrated Circuits and PCB Components.
PCBs	$ 60.00	$ 420.99	$ (360.99)	Comparable	3 stepper motor boards through AdvancedPCB, and 3 DC motor boards, includes express shipping costs
Integrated Circuits and PCB Components	$ 70.00	$ 267.57	$ (197.57)	Estimate	Purchased from Digikey. All necessary integrated circuits such as op-amps, convertors for inputs and outputs with reusability and room for error. Includes spares for most components.
Timing Belt	$ 10.00	$ 12.80	$ (2.80)	Estimate	"LEGO" Tank Treads
Sensors	$ 60.00	$ 13.80	$ 46.20	Estimate	Thru-beam sensors
Total	$ 955.00	$ 1,069.54	$ 180.46		

Figure 26. Final Budget

Appendix B: CAD Models

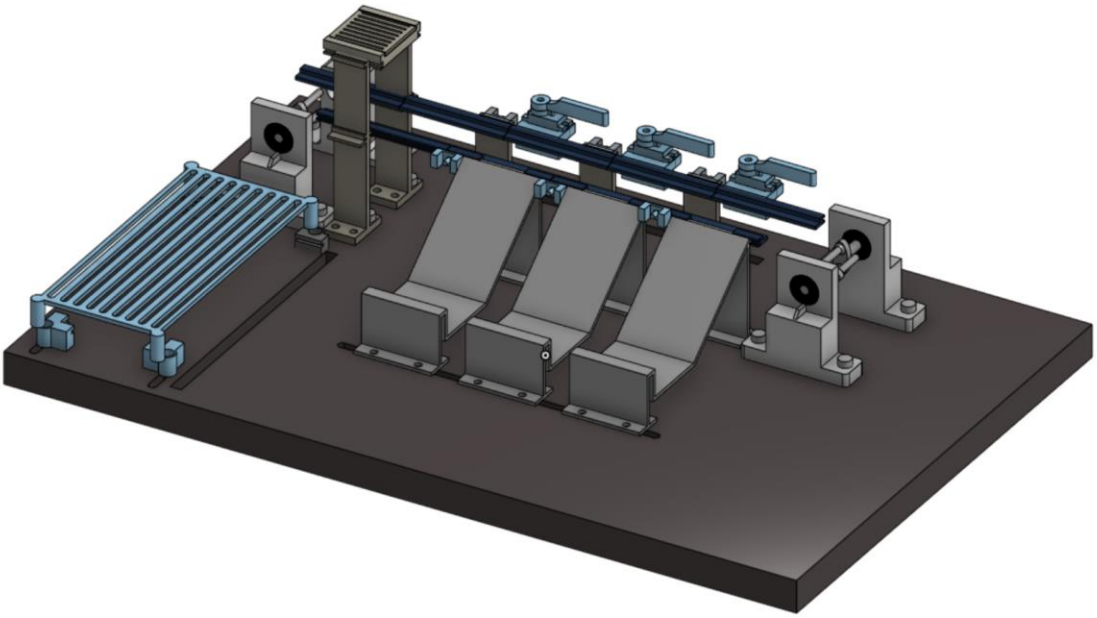

Figure 37. Final CAD Model

Final CAD Assembly, for visibility, the belt is not modeled, the PCB would be mounted on the bottom left side of the baseplate. Pucks would flow from left to right along the belt and then are derailed by the lever arms attached to the servos.

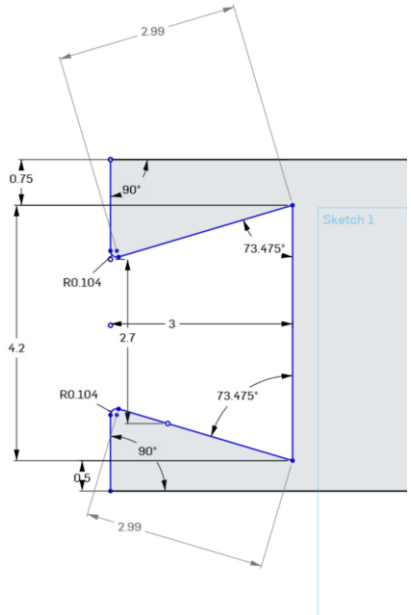

Figure 48. Rail Connector Sketch

Figure 18 shows a 2D sketch of the rail connector. This is how the rails would slide onto the legs and the break beam mounts slide into the slot as well.

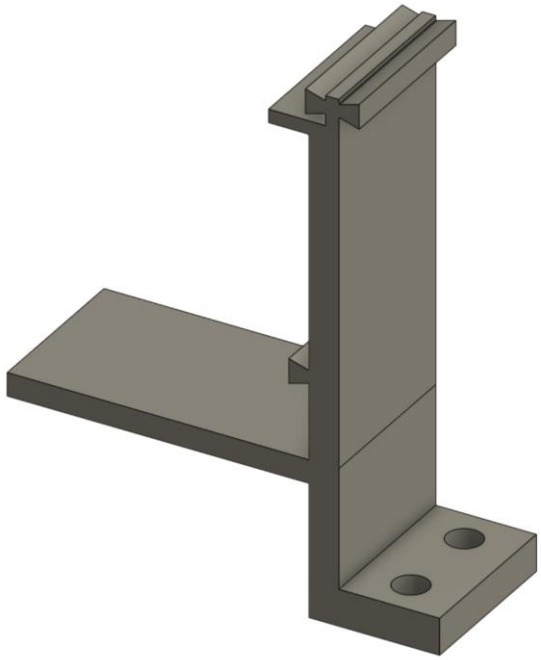

Figure 59. Final leg design

Figure 19 shows the final leg design that was used in the final prototype. There are several additions when compared to the legs from the beta prototype. There is a rear-facing connector that is meant to mount the break beams. There is also a lower rail connector that is how the microswitch is mounted to the frame. Finally, there is a ledge for the belt to rest on and prevent sagging, this also helps to ensure the microswitch can trigger.

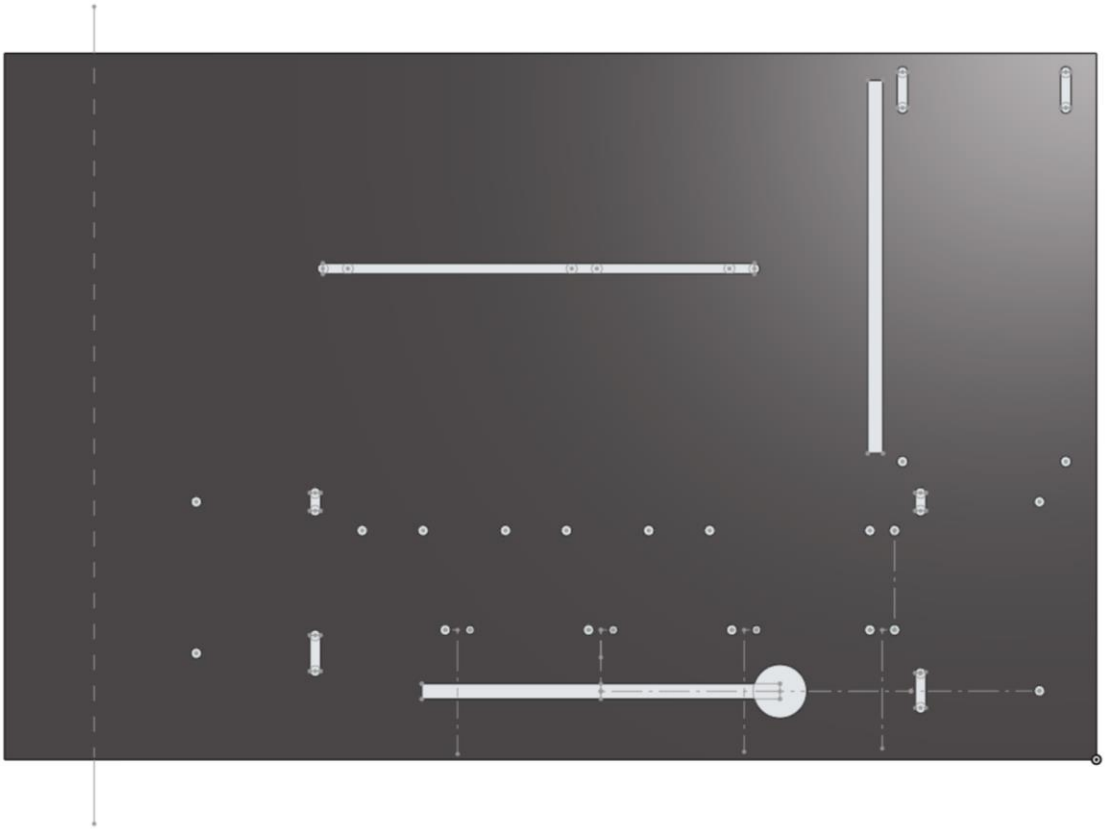

Figure 20. Final Baseplate design for 3 bays

Figure 20 shows the final baseplate design for 3 bays. The PCB would be mounted in the top right from this orientation, and motor would be mounted on the bottom right. This baseplate was made from 0.25 in thick acrylic that was laser cut with this pattern.

Appendix C: Main BOM

Quantity	Cost per Unit	Total	Item Description	Links
1	94.71	94.71	PCB Components (For 1 board, look at PCB Parts List for more detail)	(See PCB Parts List)
1	33	33	PCB (1 board)	AdvancedPCB Link
1	14	14	Stepper Motor	Digikey Link
3	5.95	17.85	Servos (3)	Digikey Link
4	6.9	27.6	Through Beam (4)	Digikey Link
1	39.9	39.9	Camera Module	Digikey Link
1	12.8	12.8	Tank Treads (For the full set)	Amazon Link
1	1.39	1.39	Microswitch	Digikey Link
3	0.98	2.94	Bearings (3)	Bearings
1	9.98	9.98	Gorilla Clear Max Super Glue (most glues compatible)	
1	6.98	6.98	26x #10-32 1-inch Bolts with Nuts (M5 also works)	
1	6.98	6.98	Washers	
4	4.35	17.4	4x Rubber Feet (just needs to have a ~1 inch standoff)	
3	1.55	4.65	Ramp with sidewalls	
2	0.06	0.12	PCB Holder (Corner)	
2	0.05	0.1	PCB Holder (side)	
1	0.61	0.61	PCB Cover	
1	0.06	0.06	Microswitch Holder	
1	0.1	0.1	Long Rail	
3	0.06	0.18	Rail for Ramp	
5	0.07	0.35	Rail	
3	0.07	0.21	Bearing Side Adapter	
1	0.07	0.07	Motor Side Adapter (stepper)	
1	0.57	0.57	Stepper Motor Stand	
1	0.08	0.08	Motor Side Adapter (DC Motor)	
1	0.59	0.59	DC Motor Stand	
1	0.06	0.06	Camera Lid	
1	0.14	0.14	Camera Rail Mount	
2	0.31	0.62	Camera Mounting Leg	
3	0.03	0.09	Break Beam Mount (goes on rail)	

3	0.03	0.09	Break Beam Mount Inverse (goes on back of leg)	
3	0.04	0.12	Lever Arm	
3	0.09	0.27	Servo Holder	
3	0.23	0.69	Leg	
1	29.32	29.32	Acrylic Sheet (16 x 24 x 0.25 in)	
3	0.45	1.35	Bearing Mount	
		325.97	TOTAL	

Appendix D: Electrical Final Schematic

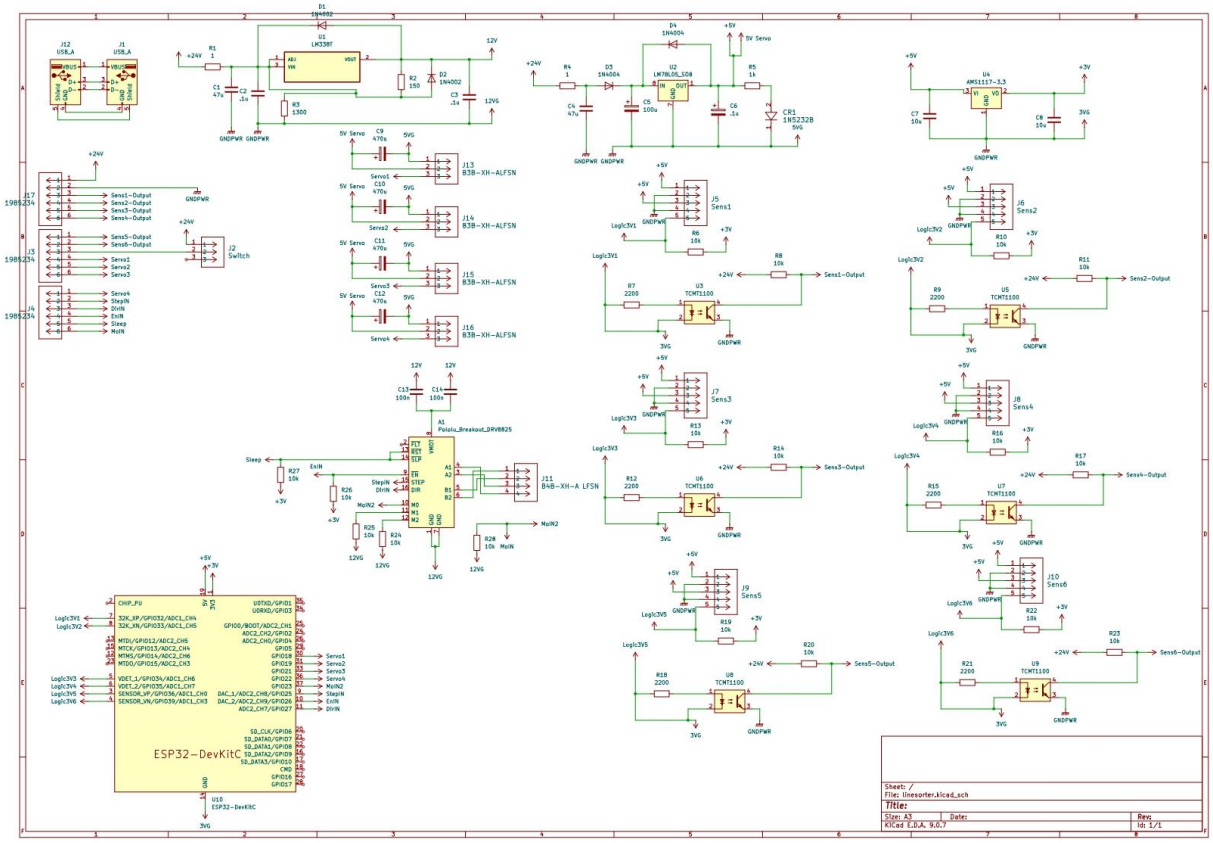

Figure 21. Final Schematic

This is the final electrical schematic for the line sorter. This was assembled in KiCad and utilized three different convertors consisting of 24 V to 12 V, 12 V to 5V and 5V to 3.3V. 12 volts were used to supply the stepper motor, 5 volts were used to supply the servos and the breakbeams and 3.3 V were used to supply the ESP32 with power. All signals are sent to interface with the ESP32 and can be controlled with either the RevPI, ESP32, or both concurrently. Optocouplers are used to allow signal transmission to the RevPi without facing damage due to interfacing with 24V power despite being powered by 5V.